EXPLODED VIEW

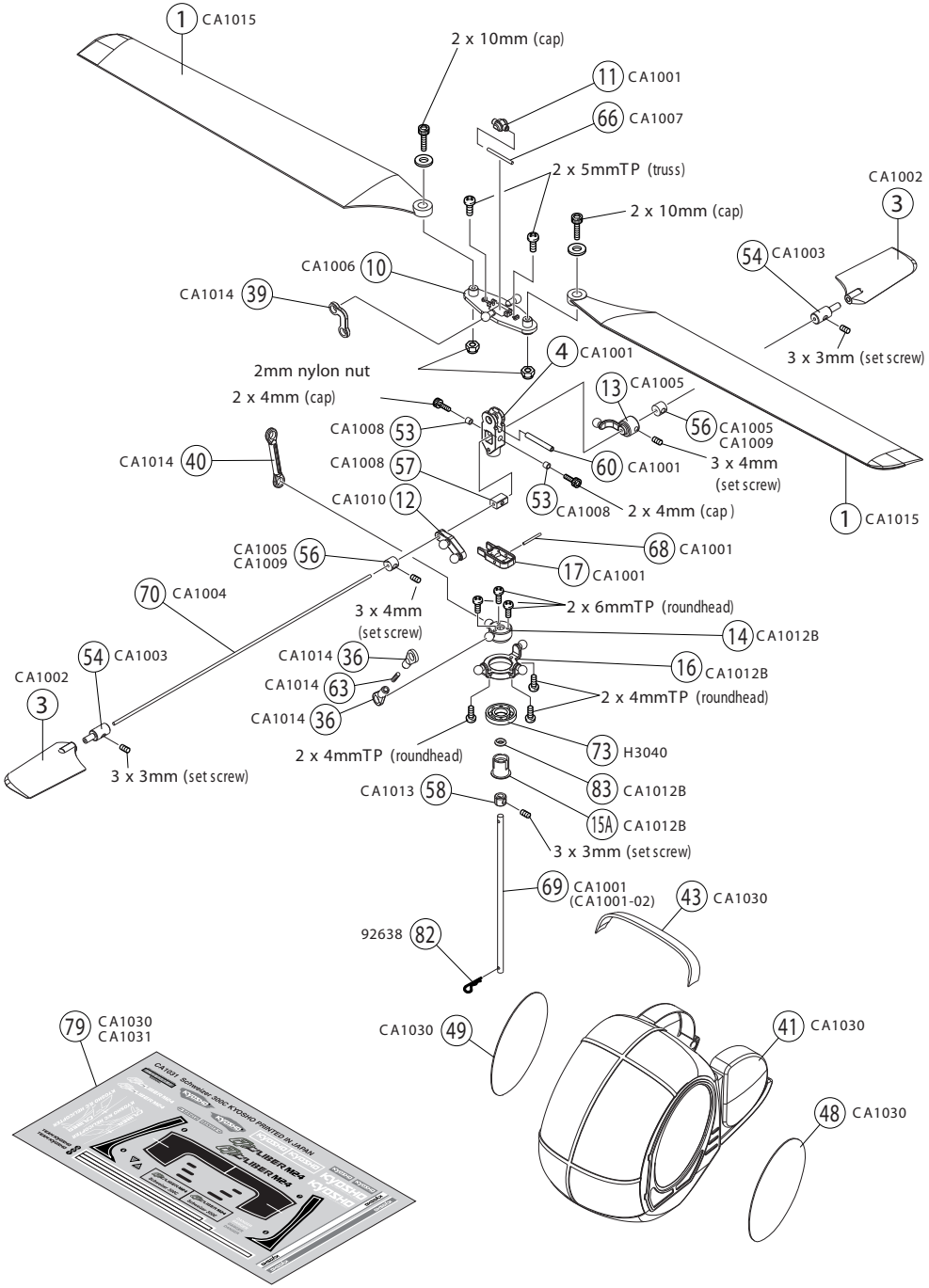

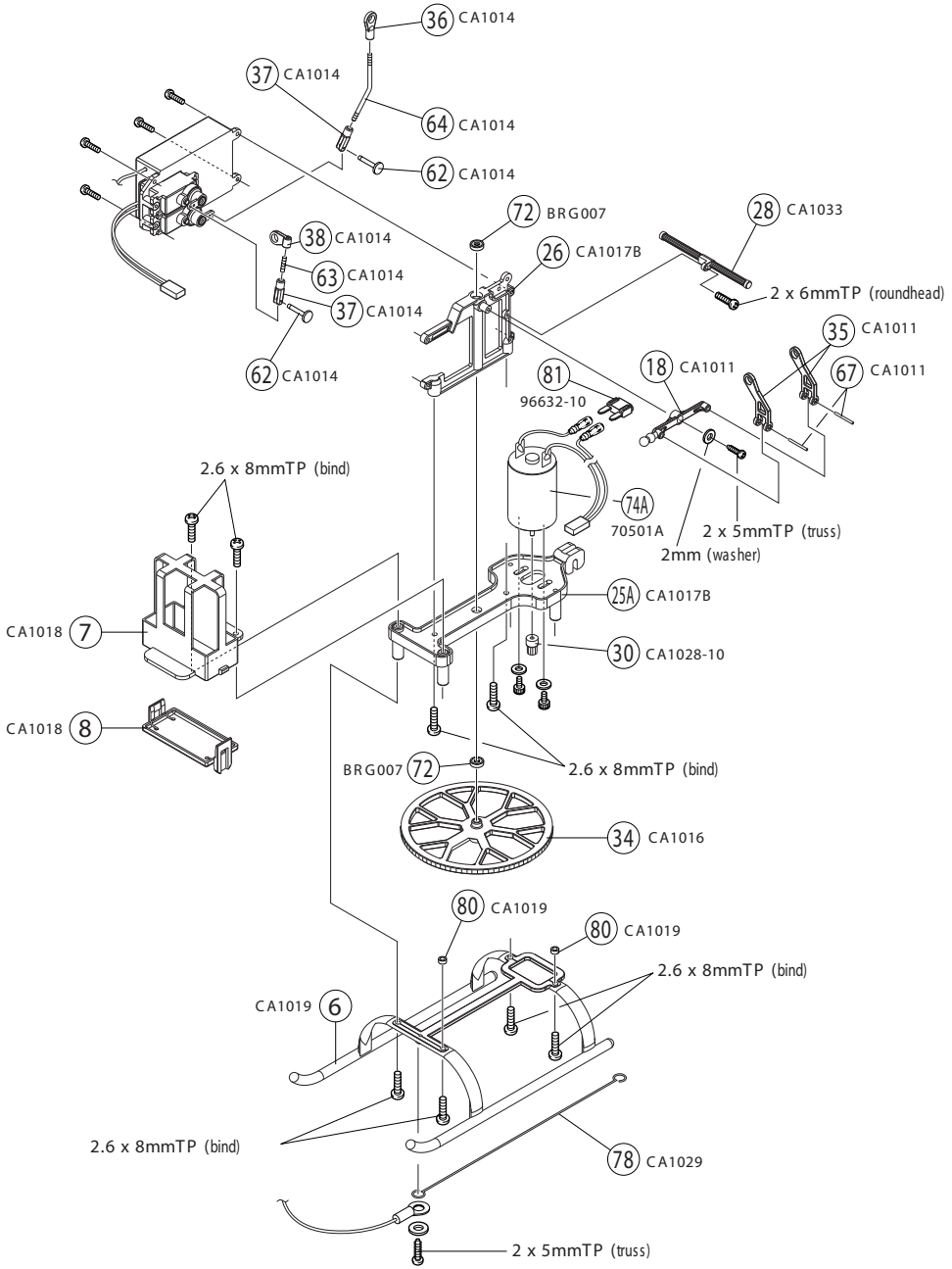
36 CA1014
37 CA1014
64 CA1014
62 CA1014
72 BRG007
28 CA1033
38 CA1014
26 CA1017B
63 CA1014
2 x 6mmTP (roundhead)
37 CA1014
35 CA1011
62 CA1014
18 CA1011
67 CA1011
81
96632-10
2.6 x 8mmTP (bind)
74A
70501A
2 x 5mmTP (truss)
2mm (washer)
25A CA1017B
CA1018 7
30 CA1028-10
CA1018 8
BRG007 72
2.6 x 8mmTP (bind)
34 CA1016
80 CA1019
80 CA1019
2.6 x 8mmTP (bind)
CA1019 6
2.6 x 8mmTP (bind)
78 CA1029
2 x 5mmTP (truss)

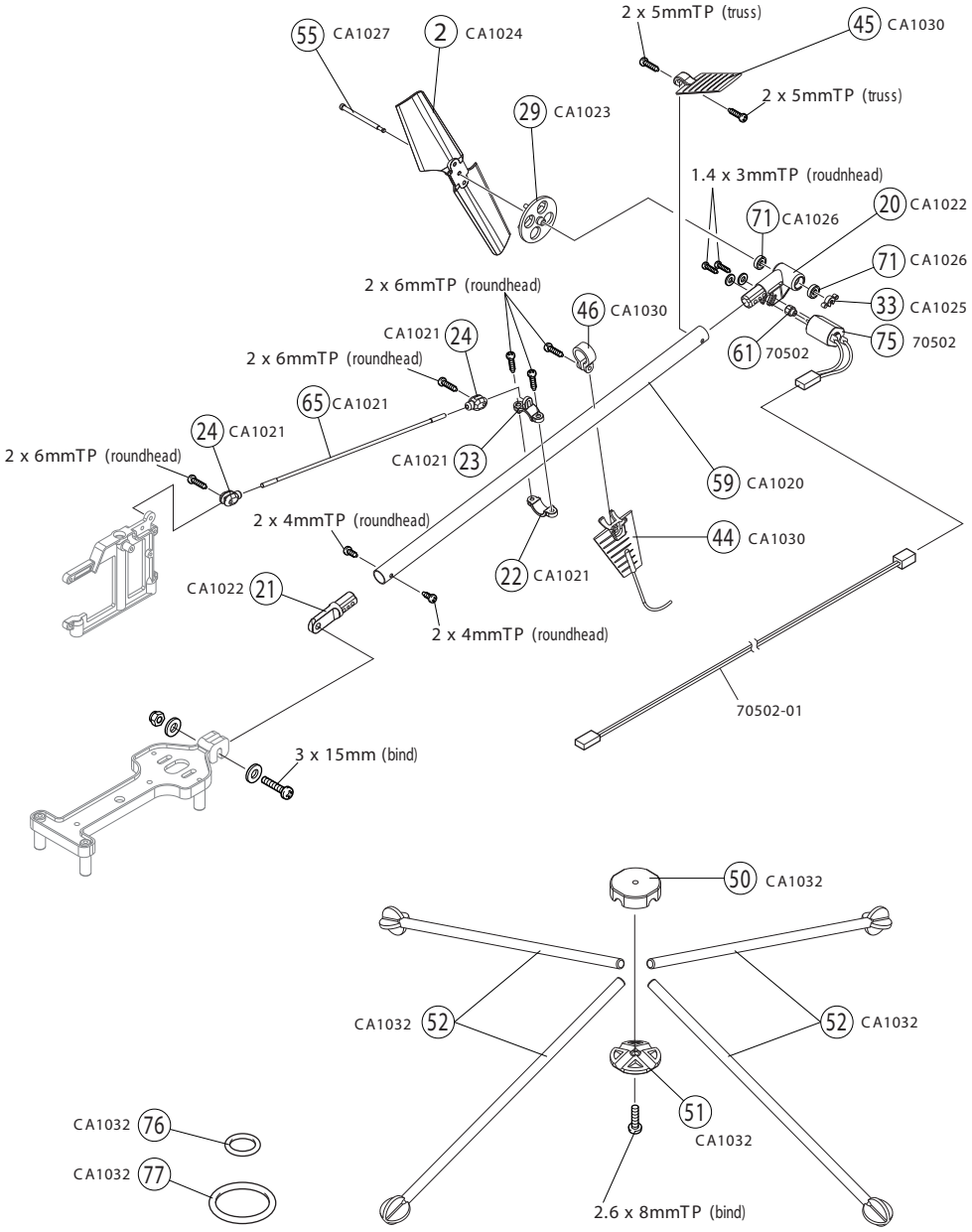
55 CA1027
2 CA1024
2 x 5mmTP (truss)
45 CA1030
2 x 5mmTP (truss)
29 CA1023
1.4 x 3mmTP (roudnhead)
71 CA1026
20 CA1022
71 CA1026
33 CA1025
75 70502
61 70502
2 x 6mmTP (roundhead)
46 CA1030
CA1021 24
2 x 6mmTP (roundhead)
65 CA1021
24 CA1021
2 x 6mmTP (roundhead)
CA1021 23
59 CA1020
2 x 4mmTP (roundhead)
44 CA1030
22 CA1021
CA1022 21
2 x 4mmTP (roundhead)
70502-01
3 x 15mm (bind)
50 CA1032
CA1032 52
52 CA1032
51 CA1032
CA1032 76
CA1032 77
2.6 x 8mmTP (bind)